IMPROVING PEOPLE'S LIVES

USER MANUAL

BED AMISSIO

USER MANUAL

BED AMISSIO



Loja
Ortopédica

Instruction manual for assembly created by the manufacturer to make the use and assembly of the product easier to understand.

If any questions remain after reading this material in full, regarding the assembly and use of the bed, please contact Loja Ortopédica.

Product distributed by:
HappyLife - Prod. Ortoped. e Cirurg., Unip., Lda (Loja Ortopédica)

Physical shop
Av. Nossa Senhora de Fátima, 28, Loja B, 2410-140, Leiria

Online shop
R. Dr. Arnaldo Cardoso e Cunha, 36, R/C Esquerdo, 2410-270, Leiria

T: (+351) 244 233 085 | E: info@lojaortopedica.pt

MANUFACTURER

JMS – Indústria de Mobiliário Hospitalar, S.A.

Rua Zona Industrial do Bunheiro, 26
3870-021 Murtosa – Portugal

T: (+351) 234 880 018 | E: jms@jmshospitalar.com

TECHNICAL SUPPORT

Contact the authorised distributor.

MU.21.096.R1.EN | 18.07.2024

CONTENTS

1. GENERAL INFORMATION 8
1.1. SYMBOLS 8
1.1.1. WARNINGS, CAUTIONS AND NOTES 8
1.1.2. PRODUCT SYMBOLS AND LABELS 8
1.1.3. SERIAL LABELS 9
1.2. STANDARDS AND REGULATIONS 9
1.3. PRODUCT DELIVERY CONDITIONS 9
1.4. SAFETY AND RISKS 10
1.4.1. SAFETY INSTRUCTIONS 10
1.4.1.1. CRUSHING HAZARD 10
1.4.1.2. BED OPERATION 10
1.4.1.3. HANDLING AND MOVING THE BED 11
1.4.1.4. ACCESSORIES 11
1.4.1.5. SPECIAL HAZARDS 11
1.4.1.6. CLEANING AND MAINTENANCE 11
1.5. PRODUCT DESCRIPTION 12
1.5.1. INTENDED PURPOSE 12
1.5.2. CORRECT USE 12
1.5.3. INCORRECT USE 12
1.5.4. BED DESCRIPTION 13
1.5.4.1. MATERIALS USED 13
1.5.4.2. CONDITIONS OF USE 14

CONTENTS

2. TECHNICAL SPECIFICATIONS 15
2.1. TECHNICAL DATA 15
2.1.1. ELECTRICAL PARAMETERS OF THE MATTRESS PLATFORM 16
2.1.2. ELECTRICAL PARAMETERS OF THE LIFTING ARMS 17
2.2. 9 V EMERGENCY BATTERY 18
2.3. HEADBOARD/FOOTBOARD AND RETAINER ASSEMBLY 19
2.3.1. HEADBOARD/FOOTBOARD ASSEMBLY EXAMPLE 19
2.3.2. MATTRESS RETAINER ASSEMBLY 20
2.4. BED INSTALLATION AND START-UP 20
2.5. HANDSET INSTALLATION 20
2.6. MAINTENANCE 21
2.7. CLEANING AND DISINFECTION 21
2.7.1. BASIC INSTRUCTIONS BEFORE CLEANING 21
2.8. CLEANING PROCEDURE 22
2.8.1. CLEANING THE MOTORS AND HANDSETS 22
2.9. ENVIRONMENTAL PROTECTION (DISPOSAL AND RECYCLING) 22
2.9.1. DISPOSAL AND RECYCLING OF ELECTRICAL COMPONENTS 22
3. INSTRUCTIONS FOR USE 23
3.1. OPERATION 24
3.1.1. HANDSET LEGEND AND FUNCTIONS 24
3.1.2. LOCKING HANDSET FUNCTIONS 25
3.1.3. HANDSET FAULT DETECTION AND TROUBLESHOOTING GUIDE 26
3.2. STORAGE AND PACKAGING 26



General Information

1. GENERAL INFORMATION

This manual contains the instructions required for the use of the AMISSIO bed, reference 10.CM.6160.1. Before use, read all the information in this manual carefully.

1.1. SYMBOLS

1.1.1. WARNINGS, CAUTIONS AND NOTES

WARNING	Indicates possible risks in procedures or conditions which, if not correctly followed, may result in death, bodily injury or other serious reactions.
CAUTION	Indicates possible risks in procedures or conditions which, if not correctly followed, may cause damage to or failure of the equipment.
NOTE	Explains or reinforces a procedure or condition.

1.1.2. PRODUCT SYMBOLS AND LABELS

	Warning		Crushing or compression hazard
REF	Article reference		Safe working load
	Manufacturer	LOT	Lot (manufacturing order)
	Date of manufacture	SN	Serial number
Model	Bed model		Indoor use only
	Do not dispose of with household waste		Read the User Manual

1.1.3. SERIAL LABELS



The product identification label contains the bed model, manufacturer details, reference, serial number, production information and the applicable safety symbols.

1.2. STANDARDS AND REGULATIONS

The bed has been designed in accordance with the applicable requirements of the following standards and regulations:

- EN 60601-1:2006 – Medical electrical equipment – Part 1: General requirements for basic safety and essential performance.
- EN 60601-1-2:2015 – Medical electrical equipment – Part 1-2: General requirements for basic safety and essential performance – Collateral standard: Electromagnetic disturbances – Requirements and tests.
- EN 60601-1-6:2010 – Medical electrical equipment – Part 1-6: General requirements for basic safety and essential performance – Collateral standard: Usability.
- EN 60601-2-52:2015 – Medical electrical equipment – Part 2-52: Particular requirements for the basic safety and essential performance of medical beds.

All products are manufactured from carefully selected raw materials and checked on receipt. The manufacturing process follows internal procedures in compliance with NP EN ISO 9001:2015 and NP EN ISO 13485.

1.3. PRODUCT DELIVERY CONDITIONS

The bed is supplied fully assembled, except for the headboard/footboard and clip-on mattress retainers. The headboard and footboard are sold separately.

All components must be fitted to the bed before use to ensure user safety.

On delivery, check that the bed is complete. Any missing parts or transport damage must be reported to the supplier immediately, in writing.



When moving or transporting the bed, make sure the brakes are released. The castors are designed for indoor use on smooth, clean floors (ceramic tiles, lino, wood and similar surfaces). The castors may be damaged if the bed is moved over rough, uneven or dirty floors.

1.4. SAFETY AND RISKS

1.4.1. SAFETY INSTRUCTIONS

Before using the bed, read the instruction manual carefully. This will help prevent injury or damage to the equipment caused by incorrect handling. Clean and disinfect the bed before first use.

The manufacturer accepts no liability for damage, injury or accidents resulting from negligence or incorrect handling of the bed.

Safety recommendations for operation of the bed and all movement instructions must be strictly followed.

1.4.1.1. CRUSHING HAZARD

- Before lowering the bed, make sure the floor underneath is completely clear. Any object beneath the bed may be damaged, cause instability or damage the bed.
- Take care when lowering the bed to ensure that no part of the body becomes trapped underneath it.
- Do not store the power supply under the bed.
- Ensure children do not operate the control system and keep pets away from the bed before activating any function.
- When opening a customer function, there must be no objects or limbs within the movement area of the mattress platform. There is a crushing hazard.
- If the patient’s physical or mental condition requires it, lock the handset when it is not in use (locking key).
- It may be advisable to keep the handset out of the patient’s reach if their clinical situation requires this.
- Bed adjustments must only be carried out by suitably instructed persons or in the presence of an instructed person.
- Never store anything under the bed.

1.4.1.2. BED OPERATION

- Use the bed only for its intended purpose and only when it is in perfect working condition.
- The bed must only be handled by persons whose knowledge and practical experience ensure correct use.
- Ensure the bed is used only by adult patients (see section 1.5.2).
- Ensure the patient, if their medical condition permits, has been informed about bed operation and all applicable safety instructions.
- The bed is intended for indoor use only.
- Move the bed only over level, firm floors.

1.4.1.3. HANDLING AND MOVING THE BED

- The patient should only sit or lie on the bed when all articulated sections are horizontal to avoid damaging the joints and motor.
- Do not use the bed if faults or abnormalities are detected that could injure users or patients.
- Adjust the height and the inclination of the mattress platform according to the patient’s build, condition and clinical status.
- When moving any part of the bed, take care with the patient and surroundings to avoid trapping or crushing.
- When raising the bed, take account of any accessories attached to it to avoid damage.
- When moving the bed, unplug, secure or safely position the cable to prevent damage.

1.4.1.4. ACCESSORIES

- To prevent faults, use only original accessories and mattresses supplied by the manufacturer.
- Ensure that the bed and its components are replaced or modified only with the manufacturer’s approval.

1.4.1.5. SPECIAL HAZARDS

- If the mains cable is damaged, there is a risk of electric shock.
- The materials used in the bed are heat resistant; however, keep the bed away from high temperatures, flammable products and ignition sources.
- The castors must always be braked (except when moving the bed), whether occupied or not.
- Do not overload the bed beyond its specified maximum load.

1.4.1.6. CLEANING AND MAINTENANCE

- Maintenance and installation must be carried out exclusively by qualified professionals.
- Disconnect the power cable before cleaning or maintaining the bed.
- During repairs, use only materials and components supplied by the manufacturer to ensure proper operation and safety.
- Modify the bed or its components only with the manufacturer’s approval.
- Inspect the bed at least once a year for wear on moving and articulated parts.

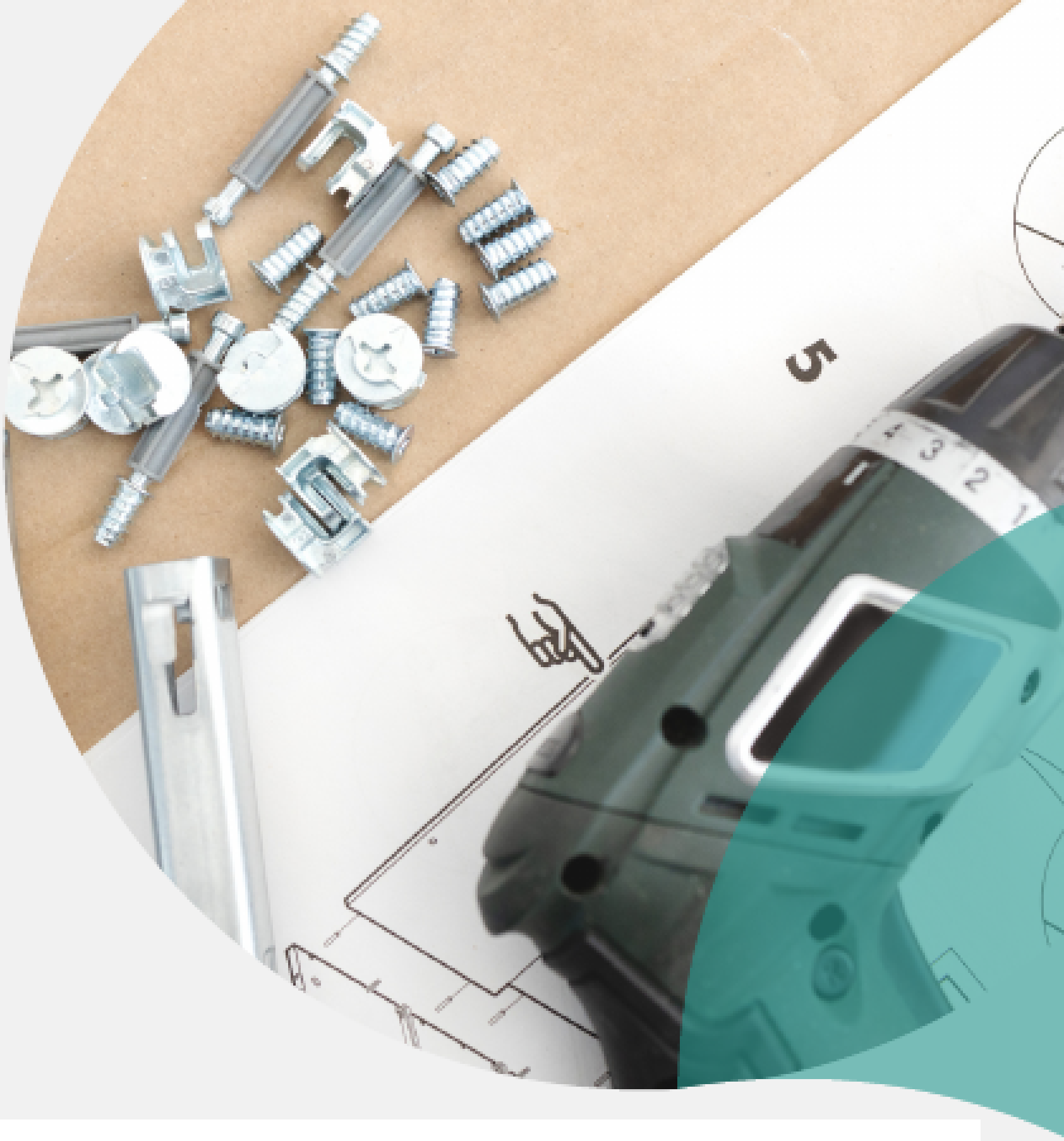

Technical Specifications

1.5. PRODUCT DESCRIPTION

1.5.1. INTENDED PURPOSE

The bed is intended to provide patients with Alzheimer’s disease with comfort and improved quality of life during rest, while assisting with getting into and out of bed and making care tasks easier for carers. It is intended to support the patient for monitoring, treatment or alleviation of disease, injury or disability.

WARNING This AMISSIO model must be fitted with side rails and a headboard/footboard to improve patient safety conditions.

CAUTION All bed-handling actions must be carried out in accordance with the manual. Any other action incompatible with this manual or with the intended use of this bed is the user’s responsibility.

1.5.2. CORRECT USE

This bed is suitable for the following conditions:

PATIENTS

- Maximum patient weight: 135 kg
- Weight > 40 kg
- Height > 146 cm
- Body mass index (BMI) > 17
- Total load including mattress and accessories must not exceed the SWL (safe working load): 170 kg

PROFESSIONALS

- Qualified medical team
- Any person familiar with the user manual
- Patients (if their medical condition permits)

LOCATION

Application environments 3 and 4 in accordance with IEC 60601-2-52:2009 / Corr.1:2010 / AMD:2015-03.

1.5.3. INCORRECT USE

Any use not described in the user manual.

1.5.4. BED DESCRIPTION

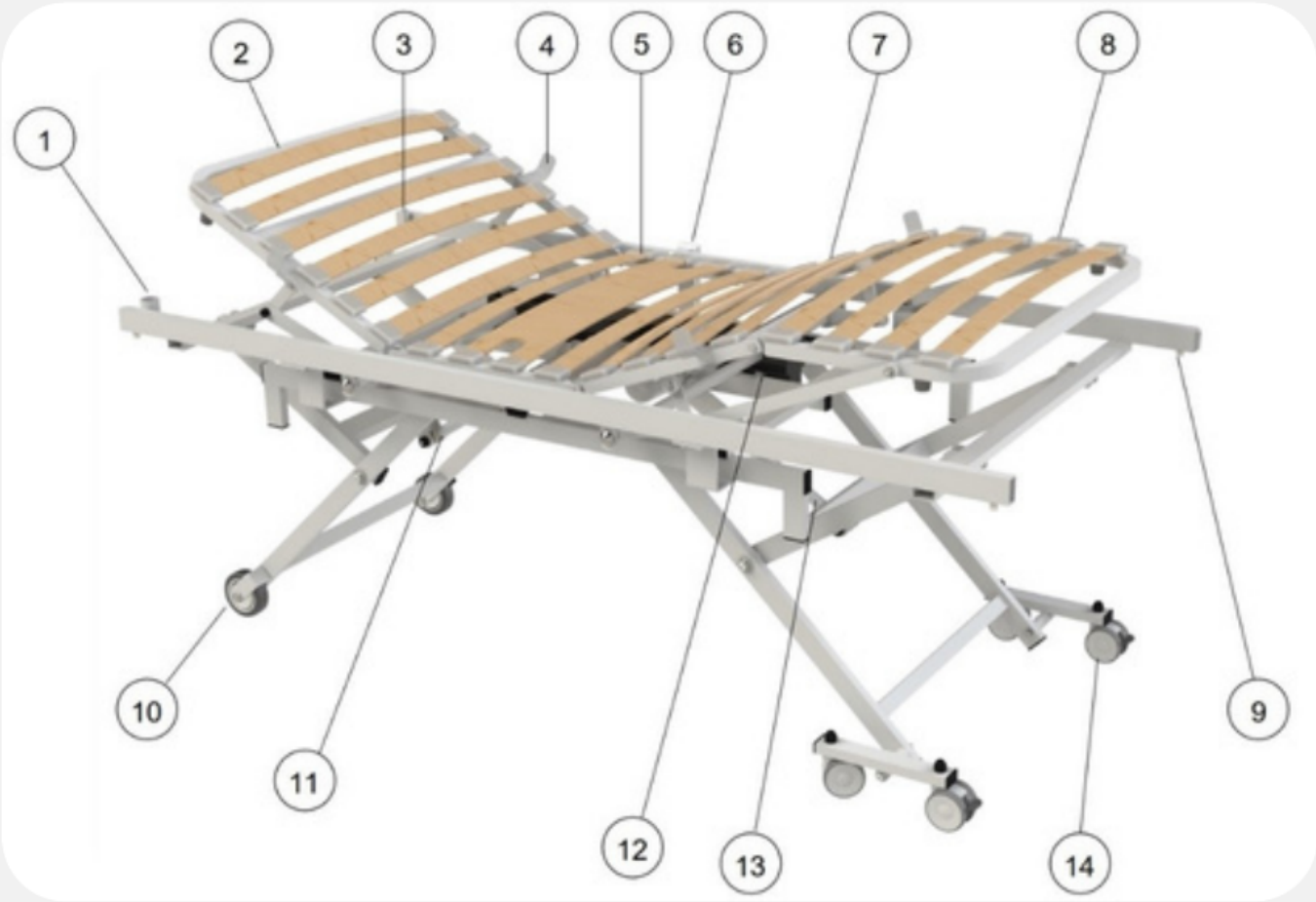

Figure 1 - AMISSIO bed

No.	Description	No.	Description
1	Suspension pole support socket	8	Foot section
2	Back section	9	M8x16 screw for headboard fixation
3	IV pole support socket	10	Ø100 mm castors
4	Clip-on mattress retainer	11	Lifting motor
5	Fixed section	12	Mattress platform motor
6	Handset	13	Lifting motor
7	Leg section	14	Dual castors Ø75 mm

1.5.4.1. MATERIALS USED

- Frame composed of a mattress platform support and chassis with lifting system manufactured primarily from epoxy-coated steel.
- Standard colour: grey frame.

1.5.4.2. CONDITIONS OF USE

The bed must be used indoors, observing the following environmental conditions:

- Temperature: +10 °C to +40 °C
- Humidity: 30% to 75%
- Atmospheric pressure: 700 hPa to 1060 hPa



WARNING The bed must not be used where flammable products are present.

Electrical installations must comply with local standards for the safety of electrical installations to ensure adequate protection of the equipment. If in doubt, always disconnect the plug from the socket in the event of electrical instability.

2. TECHNICAL SPECIFICATIONS

2.1. TECHNICAL DATA

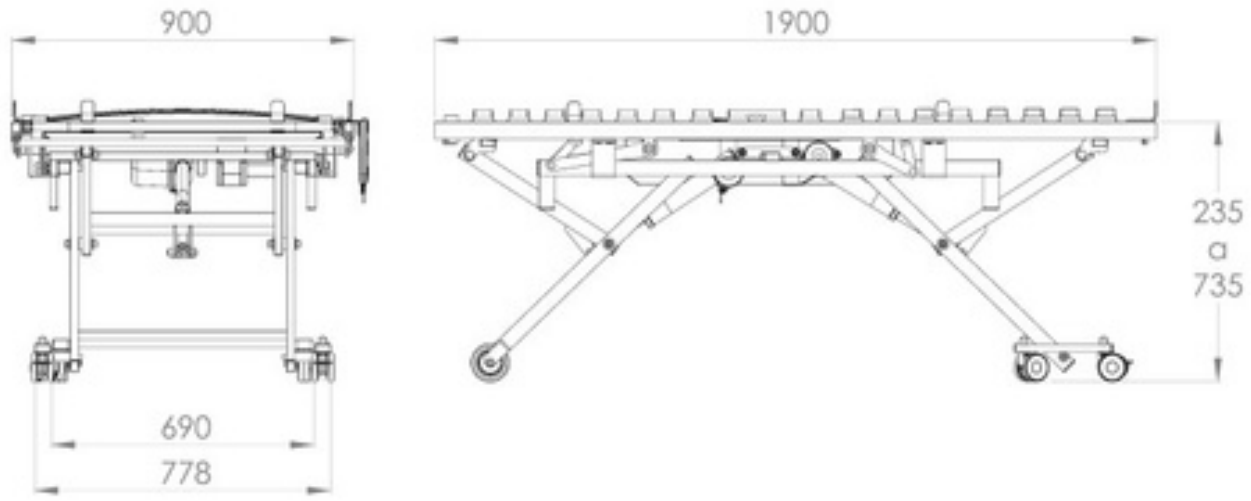

Figure 2 - General dimensions

Specification	Value
Mattress platform length:	1900 mm
Mattress platform width:	900 mm
Useful bed width:	790 mm
Section dimensions:	Back 595 x 790 mm Fixed 400 x 790 mm Legs 390 x 790 mm Feet 415 x 790 mm
Adjustable mattress platform support height:	235 - 735 mm
Adjustable back section angle:	0° to 70°
Adjustable thigh section angle:	0° to 15°
Trendelenburg position angle:	15°
Anti-Trendelenburg position angle:	15°
Maximum bed weight (without headboards):	56 kg
Maximum patient weight:	135 kg
SWL (safe working load):	170 kg

2.1.1. ELECTRICAL PARAMETERS OF THE MATTRESS PLATFORM

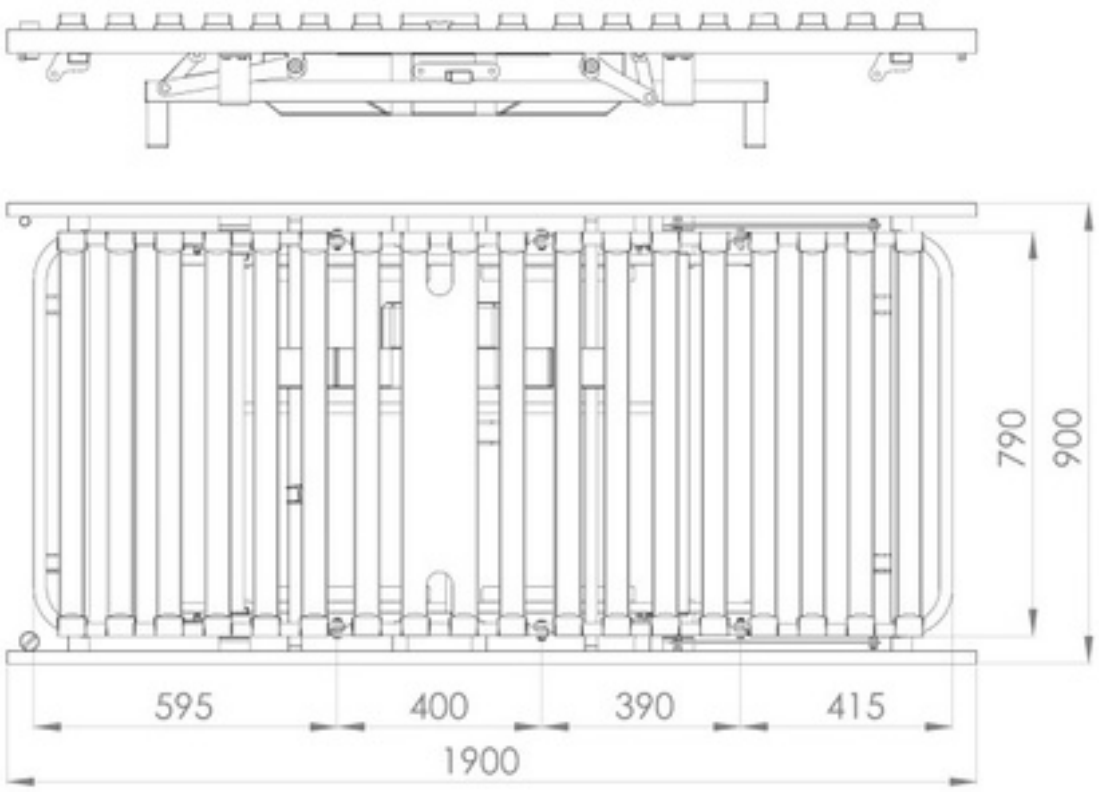

Figure 3 - AMISSIO bed platform



Figure 4 - AMISSIO bed platform

Parameter	Value
Power supply:	230 V, +/- 10%, 50-60 Hz
Operating voltage:	24 V DC
Protection against water and dust:	IPX4
Noise level:	≤ 65 dB
Electric motor operation:	15%, max. 2 min. ON / 12 min. OFF; max. 5 cycles/min.

2.1.2. ELECTRICAL PARAMETERS OF THE LIFTING ARMS

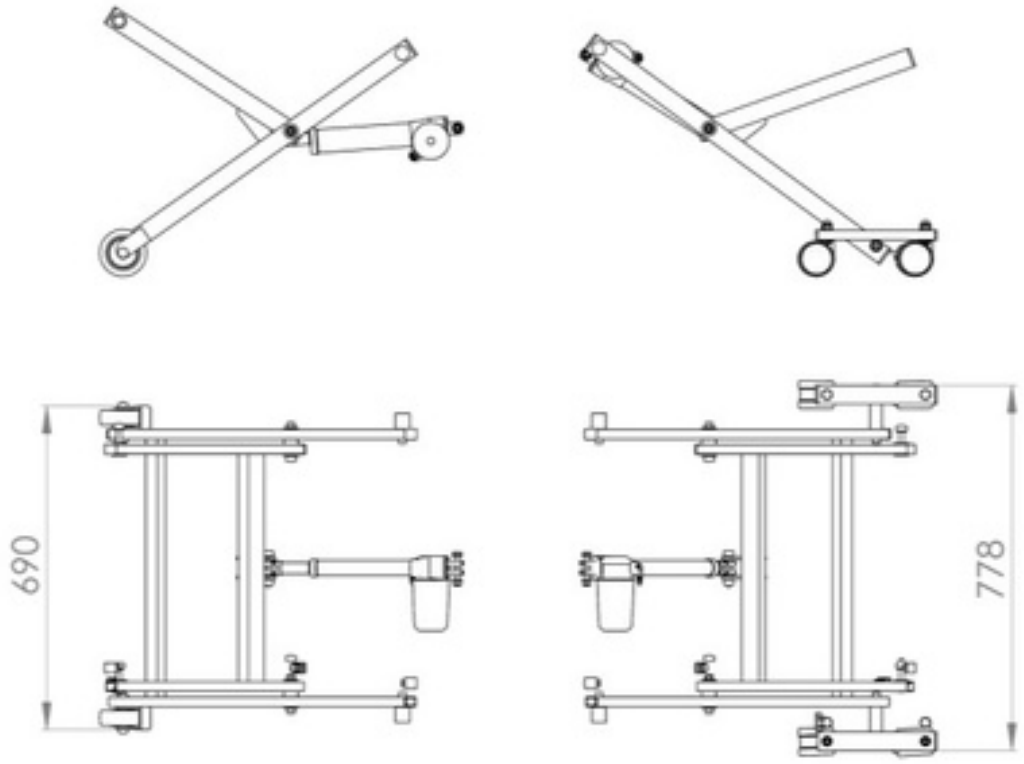

Figure 5 - AMISSIO bed lift

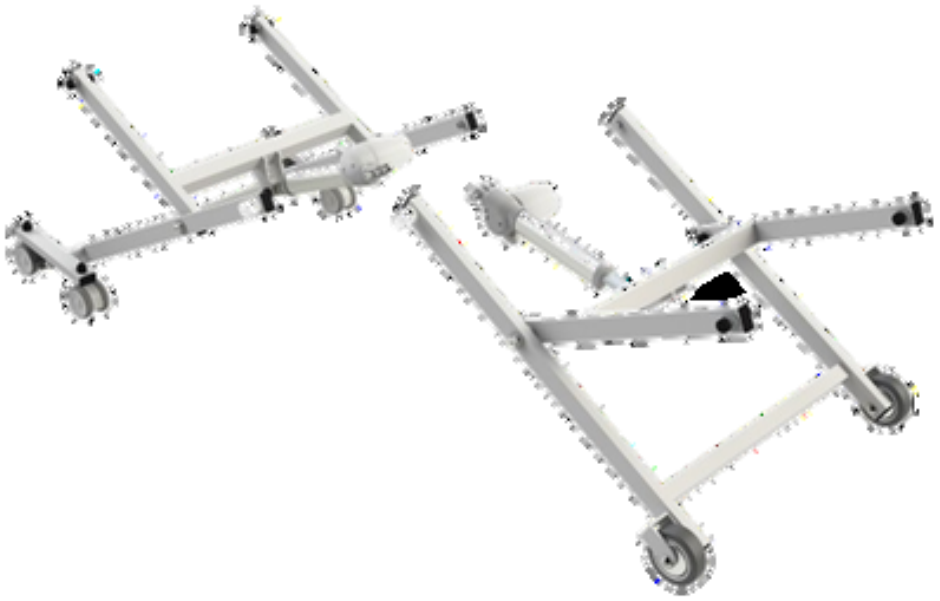

Figure 6 - AMISSIO bed lift

Parameter	Value
Power supply:	230 V, +/- 10%, 50-60 Hz
Operating voltage:	24 V DC
Protection against water and dust:	IPX4
Noise level:	≤ 65 dB
Electric motor operation:	15%, max. 2 min. ON / 12 min. OFF; max. 5 cycles/min.

2.2. 9 V EMERGENCY BATTERY

The 9 V battery allows the bed to return to the sleeping position at any time, independently of the main power supply.



Figure 7 - 9 V battery

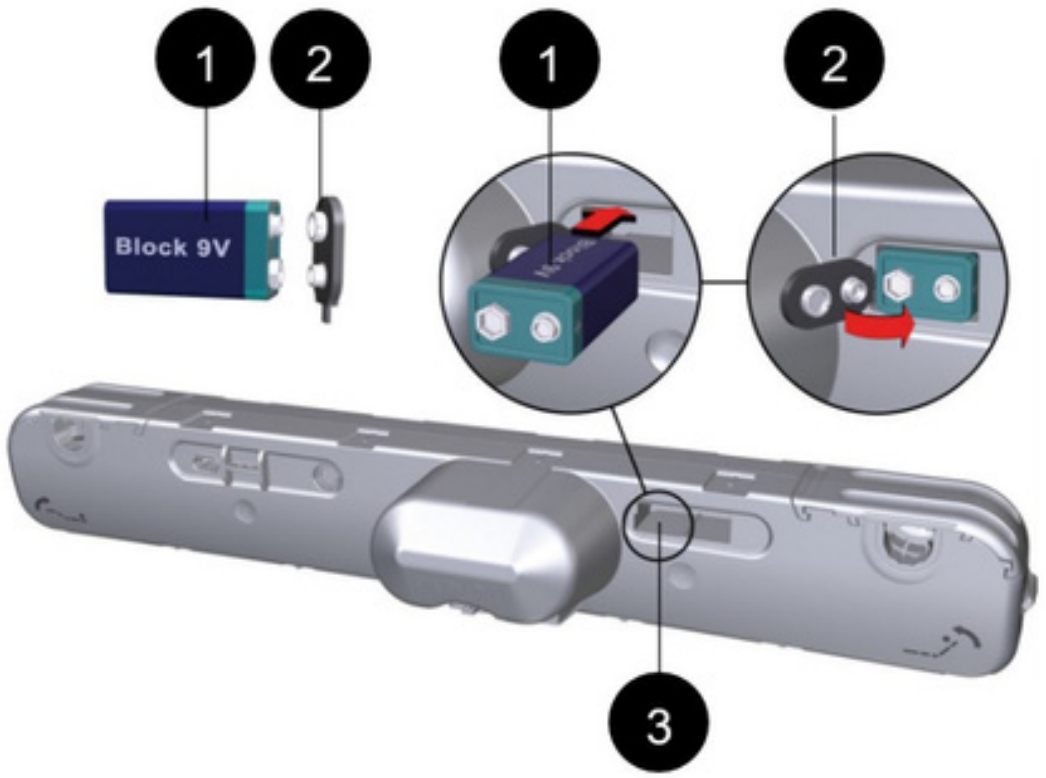

Figure 8 - Battery connection

No.	Designation
1	9 V battery
2	Battery clip
3	Battery compartment

2.3. HEADBOARD/FOOTBOARD AND RETAINER ASSEMBLY

2.3.1. HEADBOARD/FOOTBOARD ASSEMBLY EXAMPLE - MODEL 10.AC.1089.1

Tighten the screws using a 16 mm open-ended spanner (spanner not included).

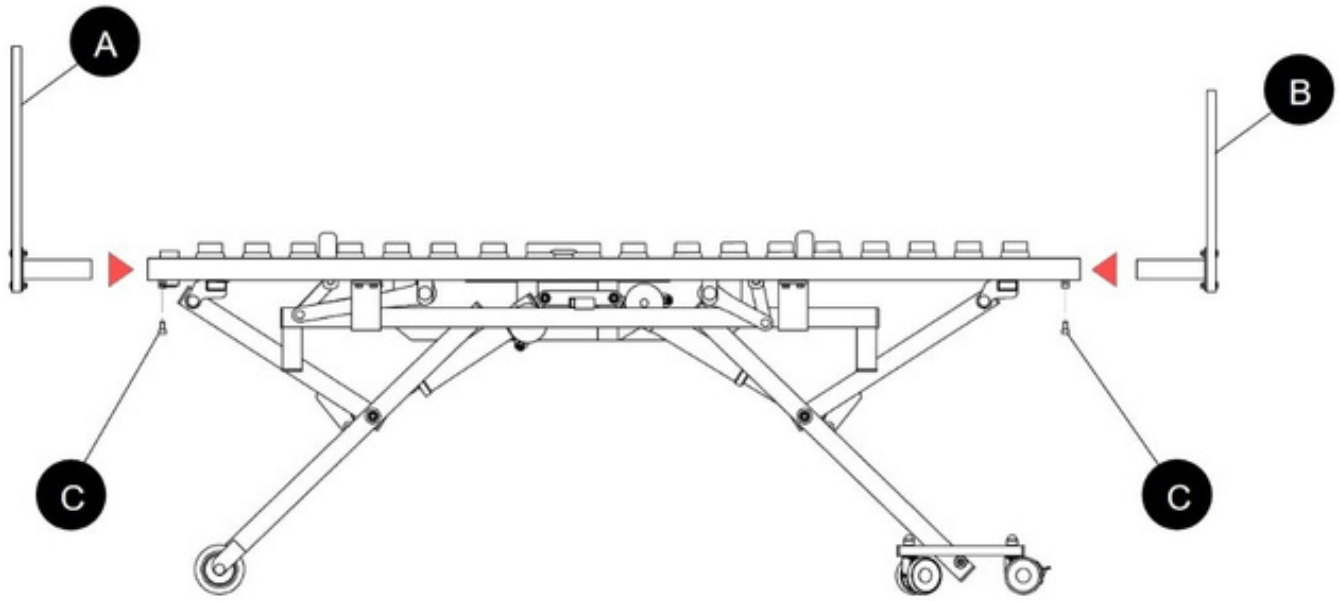

Figure 9 - Headboard assembly, model 10.CM.1089.1

No.	Qty.	Description
A	1	Headboard
B	1	Footboard
C	4	M8x16 hex socket screw

Headboards are sold separately. Several headboard models are available; to choose the model that best suits your bed, please contact the distributor.



Figure 10 - Headboard/footboard fitted

2.3.2. MATTRESS RETAINER ASSEMBLY



Figure 11 - Mattress retainers clipped onto the mattress platform

Pay attention to the positioning of the mattress retainers. They must not be positioned over the articulations, as this could hinder bed movement and damage the material.

2.4. BED INSTALLATION AND START-UP

- If the temperature during transport or storage differs from the recommended operating temperature (see section 1.5.4.2), leave the bed disconnected from the mains for 24 hours so that it can adapt to room conditions.
- Connect the bed to the power supply.
- To test the articulated parts of the mattress platform, raise and lower each part to its maximum position.
- Check all handset functions.

2.5. HANDSET INSTALLATION

The handset and the bed’s electrical components are pre-installed at the factory and therefore do not require assembly. However, before first use, check that all components are correctly connected.

To guarantee safety, the electrical components are factory sealed. Opening them damages the seals and indicates that they have been opened or tampered with. The manufacturer does not assume the warranty of items with a damaged seal.

2.6. MAINTENANCE

Because some parts of the bed are subject to wear through use, cleaning and disinfection, inspect the following at least once every 3 months:

- Screws.
- Joints and screws of the mattress platform sections and the motor; clean and lubricate with silicone oil.

Any special maintenance procedure requires intervention by qualified personnel or the manufacturer.



During cleaning and maintenance operations, if you detect any abnormality, do not put the bed into operation and contact the supplier.

2.7. CLEANING AND DISINFECTION

2.7.1. BASIC INSTRUCTIONS BEFORE CLEANING

Use appropriate detergents to disinfect the bed. If in doubt, consult the manufacturer.



- Before carrying out any cleaning operation, disconnect the bed from the mains.



- Do not use abrasive detergents or other materials that may damage the coating.
- Do not use corrosive, caustic or acidic products, or detergents that may alter the structure or behaviour of plastics (thinner, acetone, petroleum, etc.).
- Clean the bed with a soft, damp cloth.
- The beds were not designed for automatic washing stations.
- The beds were not designed for high-pressure water cleaning, spraying or steam cleaning.



The manufacturer accepts no responsibility for any risk or damage arising from improper cleaning carried out contrary to the instructions set out in this manual.

2.8. CLEANING PROCEDURE

- For better access to all parts of the bed, raise the mattress platform to its highest position and adjust the back and foot sections to their maximum positions.
- Brake the castors, lock the articulation movements on the supervisor handset, and disconnect the patient handset to prevent accidental injury during cleaning.
- Disconnect the mains cable.
- The degree of cleaning and disinfection must depend on the bed’s intended use and level of contamination.

2.8.1. CLEANING THE MOTORS AND HANDSETS

Cleaning is very simple thanks to their flat surfaces. Use a soft, damp cloth.

Never use automatic washing stations, tunnel washing, high-pressure water or liquid sprays when cleaning the motors and handsets. You risk damaging the equipment. Do not use solvents such as benzene, alcohol or similar substances.

2.9. ENVIRONMENTAL PROTECTION (DISPOSAL AND RECYCLING)

JMS is committed to preserving the environment. Accordingly, we ask that you:
- Separate packaging waste and deliver it to the relevant recycling points or licensed operators.
- At the end of its service life, hand the product over to a licensed operator.
- Do not dispose of the product together with ordinary household waste.

2.9.1. DISPOSAL AND RECYCLING OF ELECTRICAL COMPONENTS

All electrical components at the end of their life must be redirected to licensed operators. Disposal and recycling operations must be carried out in accordance with Decree-Law no. 152-D/2017 of 11 December.

Thank you for your cooperation!





Instructions for Use

3. INSTRUCTIONS FOR USE

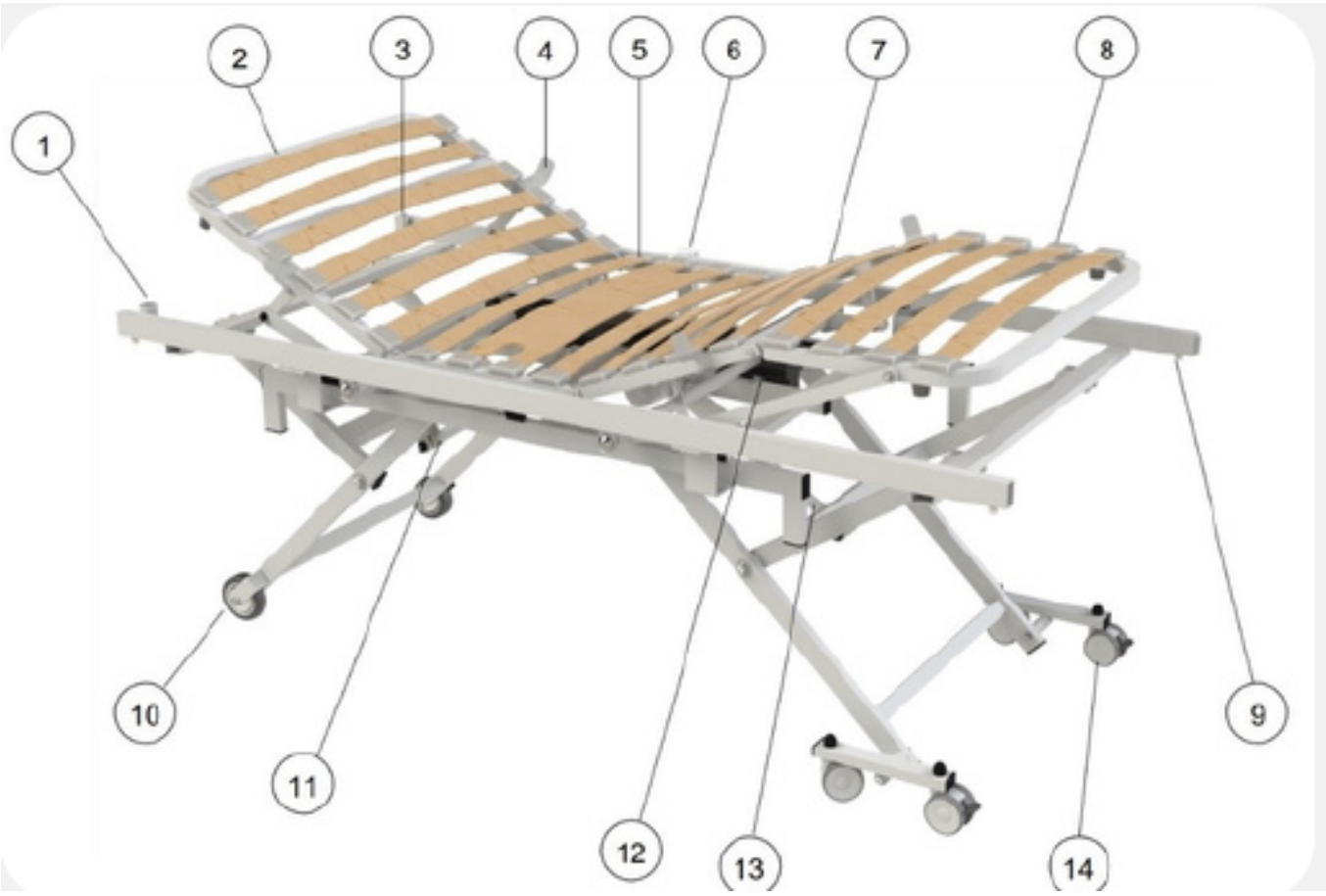

Figure 12 – AMISSIO bed

No.	Description	No.	Description
1	Suspension pole support socket	8	Foot section
2	Back section	9	M8x16 screw for headboard fixation
3	IV pole support socket	10	Ø100 mm castors
4	Clip-on retainer	11	Lifting motor
5	Fixed section	12	Mattress platform motor
6	Handset	13	Lifting motor
7	Leg section	14	Dual castors Ø75 mm

3.1. OPERATION

3.1.1. HANDSET LEGEND AND FUNCTIONS

Raise the back section

Lower the back section

Raise the foot section

Lower the foot section

Raise the back and foot sections simultaneously

Lower the back and foot sections simultaneously

Raise the mattress platform

Lower the mattress platform

Anti-Trendelenburg

Trendelenburg



Figure 13 – Handset

Before the patient uses the handset, they must be informed about all the instructions necessary for correct handset operation.

Do not leave the handset within reach of the patient or other persons if the medical team considers that the patient’s clinical situation does not allow its use.

3.1.2. LOCKING HANDSET FUNCTIONS



Positions I and II are programmable locking options. If you need a specific position to be locked, consult the supplier to programme the handset.

3.1.3. HANDSET FAULT DETECTION AND TROUBLESHOOTING GUIDE

The following table is intended to help with the detection and elimination of faults or errors.

If you detect a fault or error that is not identified in this manual, contact the supplier. Faults may only be inspected or corrected by qualified electrical personnel.

Problem	Possible cause	Resolution
Handset does not work	- Power supply is insufficient.	- Check the electrical cable connection; if necessary, disconnect and reconnect it.
	- Handset is defective.	- Contact the supplier.
No movement takes place	- Power cable is interrupted.	- Check the electrical cable connection; if necessary, disconnect and reconnect it.
	- Power cable is damaged.	- Contact the supplier / replace the handset.

3.2. STORAGE AND PACKAGING

The bed is supplied packed in a cardboard box unless the customer requests a different type of packaging.

The bed must not be stored in damp locations. It must be protected from falling objects, must not be stacked and should preferably be stored horizontally. Placing weights on the packaging is not recommended, as this may damage its components.

JMS accepts no liability for damage caused to beds fitted with accessories (side rails, headboards/footboards, suspension poles, IV poles or other types of accessories not previously tested) that are not manufactured by JMS.

JMS accepts no liability for damage caused by misuse, failure to comply with these or other instructions, or negligence in the use and handling of the product.

JMS reserves the right to make changes to the design, functionality, appearance and commercialisation of its products at any time and without prior notice, and to update this manual whenever necessary.